DEAKIN UNIVERSITY

Physical and mechanical testing of textiles

AUTHOR(S)

Xungai Wang, Xin Liu, Christopher Hurren

PUBLICATION DATE

01-01-2008

HANDLE

10536/DRO/DU:30016962

Downloaded from Deakin University's Figshare repository

Deakin University CRICOS Provider Code: 00113B

4

Physical and mechanical testing of textiles

X WANG, X LIU and C HURREN,
Deakin University, Australia

Abstract: This chapter describes the key physical and mechanical properties of fabrics and the associated test methods. It covers fabric weight and thickness, fabric strength, fabric stretch and abrasion resistance, as well as properties related to fabric aesthetics. A brief account of future trends in this area is also provided.

Key words: fabrics, physical properties, mechanical properties, abrasion resistance, aesthetic properties.

4.1 Introduction

Fabrics made from both natural and manufactured fibres have been extensively used for clothing, decoration and industrial applications. The physical and mechanical properties of these fabrics are affected by the fibre type, yarn construction and fabric structure, as well as any treatment that may have been applied to the materials. A range of fabric performance parameters are assessed for different end-use applications.

Unlike other homogeneous materials, fabrics are heterogeneous materials. The test results differ when a fabric specimen is tested in different directions (e.g. warp or weft for wovens, course or wale for knits). While different test standards are applied to different types of fabric tests, it is important to note that the three important factors for any test are the sampling protocol, the conditions of measurement, and the instrumentation and measurement procedure.

This chapter is focused on the physical and mechanical tests of fabrics. Specifically, it covers the following tests:

- Weight and thickness
- Tensile strength
- Tear strength
- Seam strength and seam slippage
- Burst strength
- Stretch properties
- Abrasion resistance
- Drape
- Bending

- Shearing
- Compression.

While the principles of these tests have not changed much over the past 70 years, there has been considerable advance in the instrumentation used to test properties such as strength, abrasion and fabric handle. For each test and where appropriate, the different test methods and standards are introduced and compared in this chapter. The applications and future trends of these tests are briefly discussed.

4.2 Fabric weight and thickness

Weight measurement of a fabric is often a prerequisite for subsequent tests of other fabric properties. If fabric weight or dimension is not kept constant or normalised then the test results will not be comparable.

The thickness of a fabric is one of its basic properties, giving information on its warmth, weight and stiffness. Thickness measurements are very sensitive to the pressure and sample size used in the measurement, which will be briefly discussed in the section on fabric handle. In practice, fabric mass per unit area is often used as an indicator of thickness.

4.2.1 Methods for testing fabric weight and thickness

Weight can be determined by a mass per unit area or a mass per unit length of fabric. Specimens of known dimensions are taken by a cutting device or a template, to obtain a consistent specimen size. The larger the specimen size, the more accurate the measurement, and most test standards require an area of 10 000 mm^2 or more to be measured. The accuracy of cutting the specimen should be within 1% of the area.

Five specimens should be selected from each fabric sample. Specimen selection should avoid taking samples from the fabric selvedge or close to the ends of a fabric piece. Testing should be conducted in a conditioned atmosphere with preconditioned samples and care should be taken to avoid the loss of fibres/threads during weighing. Results are commonly reported in grams per square metre (g/m^2).

$$m_{ua} = \frac{m}{a} \qquad 4.1$$

where m_{ua} = mass per unit area, in g/m^2; a = specimen area, in m^2; and m = mass of specimen, in g.

If mass per unit length is required then the following formula is used:

$$\bar{m}_{ul} = \bar{m}_{ua} \times \bar{w} \qquad 4.2$$

where $\bar{m}_{ul}$ = the mean mass per unit length, in g/m, and $\bar{w}$ = the mean width, in m.

The standards used for the weight test include:

- ASTM D3776-96(2002) Standard test methods for mass per unit area (weight) of fabric
- ISO 3801-1977 Textiles – Woven fabrics – Determination of mass per unit length and mass per unit area
- AS 2001.2.8-2001 Determination of mass per unit area and mass per unit length of fabrics.

4.3 Fabric strength

The strength tests covered in this section include tensile, tear, seam and burst strength. These mechanical properties are important for all textile users including fabric processors, garment manufacturers, designers and customers.

4.3.1 Tensile strength

Measurement of tensile stress–strain properties is the most common mechanical measurement on fabrics. It is used to determine the behaviour of a sample while under an axial stretching load. From this, the breaking load and elongation can be obtained. The principle of the tensile strength test is simple: a test piece is held in two or more places and extended until it breaks. The tensile properties measured are generally considered arbitrary rather than absolute. Results depend on specimen geometry, the fibre type and arrangement, as well as the fabric structure.

Break modes

There are two common types of tensile breaks: sharp break (Fig. 4.1) and percentage break (Fig. 4.2). A sharp break is a sudden drop in load. This test is normally called pull to break. A percentage break is generally shown as a gradual reduction in the load from its maximum as further extension is applied. A percentage drop from maximum load is often used to define an end point or break point. This test is normally called pull to yield and can have all of the same setup parameters as a pull to break. Modern tensile test instruments can be set up in both of the break modes. Most test methods report both maximum load and load at break, as the breaking strength is not always the maximum strength for the material, especially for soft and elastic fabrics.

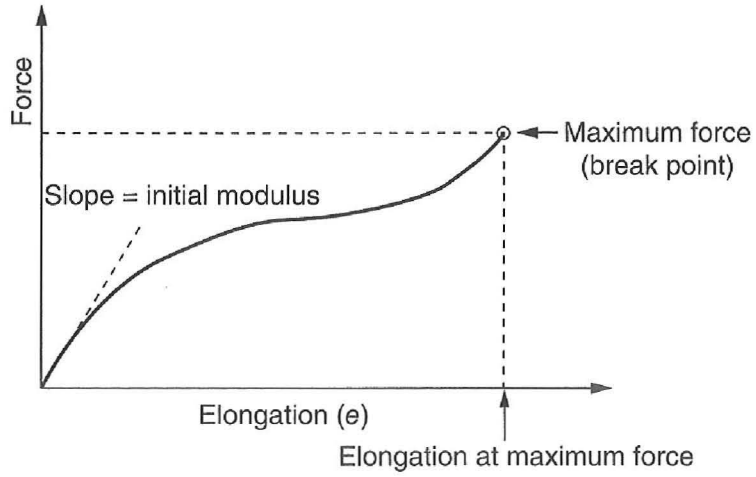

4.1 Tensile strength test curve (sharp break).

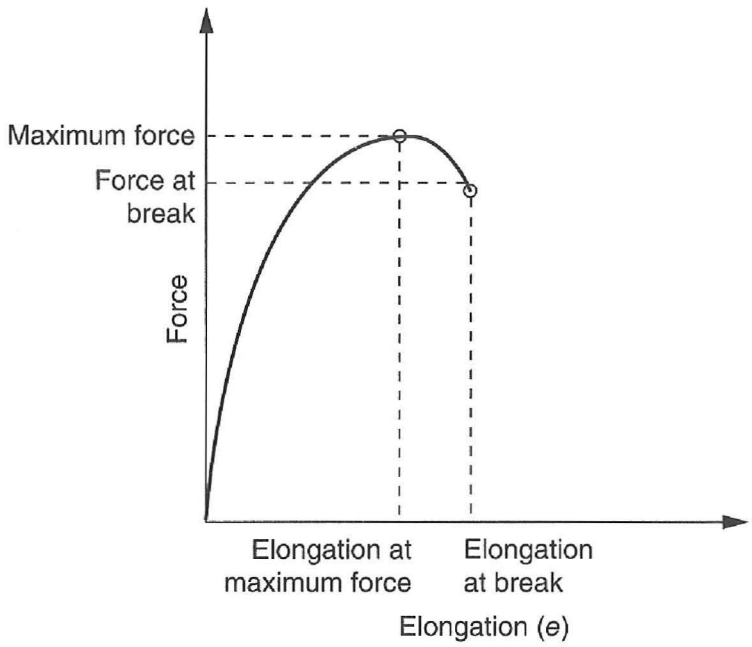

4.2 Tensile strength test curve (percentage break).

Extension

Extension is defined as the change in length of a material due to stretching. When a fabric of original length l_0 is stressed along its axis, it extends an amount dl. The strain in the sample is dl/l_0 (viz. the ratio of the extension of a material to the length of the material prior to stretching). The symbol e is normally used to represent strain, and can be referred to as elongation. Strain is a dimensionless quantity, often reported as a percentage.

Initial modulus

Young's modulus or the initial modulus (IM) is a measure of the amount of deformation that is caused by a small stress. Materials with a high modulus, often called stiff or hard materials, deform or deflect very little in the presence of a stress. Materials with a low modulus, often called soft materials, deflect significantly. In the case of fabric, initial modulus is related to the fabric handle. A higher IM means a stiffer or harsher fabric handle whereas a lower IM provides a softer fabric handle.

Tensile testing machine

Most tensile testing machines can operate in three modes:

- Constant-rate-of extension (CRE)
- Constant-rate-of traverse (CRT)
- Constant-rate-of-load (CRL).

The most commonly used mode is the CRE mode and is often required by the test standards. The main factors that need to be considered are the size and accuracy of the load cell (0.5–25 kN), the distance of cross-head travel (0.1–2 m) and the rate of cross-head travel (0.1–500 mm/min). Common tensile results include maximum load, deflection at maximum load, load at break, and deflection at break. Other data can be calculated from these results, such as work at maximum load, stiffness, work at break, stress, strain and Young's modulus. Most modern machines utilise a computer program to capture the data and calculate any additional results.

Tensile strength at break is not necessarily the best indicator of fitness for purpose. In some cases (i.e. web, linoleum and rope) the work to rupture (or break) is more important. The work to rupture is the energy absorbed by the material up to the point of rupture and is measured in joules. Work to rupture may be used to indicate fabric toughness.

Methods for testing tensile strength

Three methods (see Fig. 4.3) have been commonly used to measure tensile strength:

1. *Grab test.* In the grab test, the width of the jaws is less than the width of the specimen. An example would be for a 100 mm wide specimen where the centrally mounted jaws are only 25 mm wide. This method is used for woven high-density fabrics and those fabrics with threads not easy to remove from the edges. The grab method is used whenever it is desired to determine the 'effective strength' of the fabric in use.

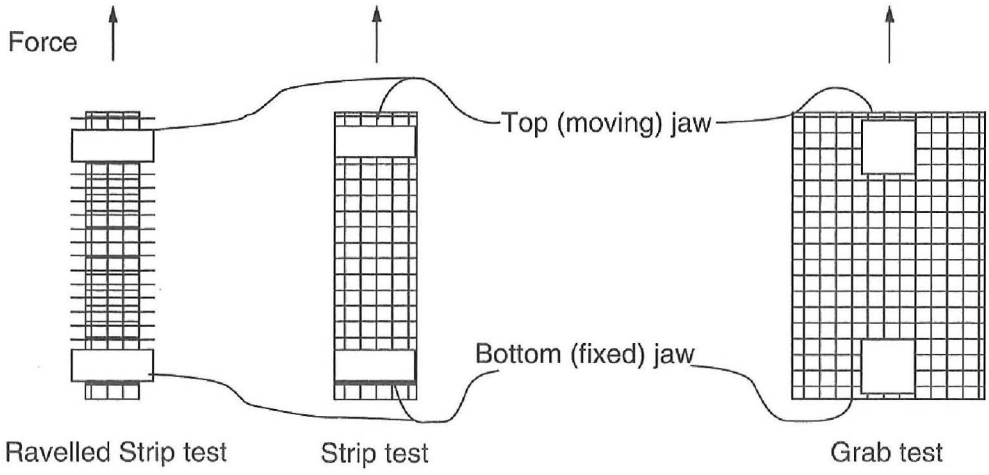

4.3 Sample gripping methods.

2. *Modified grab test.* The mounting geometry is the same as for the grab test; however, lateral slits are made in the specimen to sever all yarns bordering the portion to be strength tested, reducing to a minimum the 'fabric resistance' inherent in the grab method. This method is desirable for high-strength fabrics.
3. *Strip test.* There are two types of strip test: the ravelled strip test and the cut strip test. In both tests the entire width of the specimen is gripped in both the upper and lower jaws. The ravelled strip test is only used for woven fabric and specimens are prepared by removing threads from either side of the test piece until it is the correct width. The cut strip test is used for fabrics that cannot have threads removed from their sides such as knits, non-wovens, felts and coated fabrics. The test specimens are prepared by accurately cutting to size.

There is no simple relationship between grab tests and strip tests since the amount of fabric resistance depends on the fabric structure, fabric count, mobility of yarns and many other factors. The strip tests can provide information on tensile strength and elongation of fabric; however, the grab test can only give the breaking strength.

Factors affecting the tensile strength

It should be noted that many factors can affect the tensile test results. These include the number of test specimens, the gauge length used, the extension rate for the test, jaw slippage and damage to the specimen by the jaws that may cause 'jaw break'. These factors should be carefully considered when undertaking the tensile tests of fabrics.

1. *Number of test specimens.* With any test method the number of specimens tested will dictate the precision of the results. The higher the number of tests, the more precise the results.

2. *Gauge length.* A change in gauge length of a fabric will result in a change in the values obtained for maximum load, breaking load and initial modulus. The longer the gauge length, the lower the initial modulus result. The gauge length should be consistent for all tests if comparisons are to be made from test to test.
3. *Extension rate.* The extension rate (or the cross-head traverse speed) influences the elongation and break force of the fabric. Results of tests conducted at different rates of extension will not be directly comparable; however, fabrics of different elastic moduli require different test speeds.
4. *Jaws or grips.* Jaws are the part of the clamping device that grip the fabric during a test. They should be capable of holding the test piece without allowing it to slip; however, they should not over-grip, causing damage. Smooth, flat or engraved corrugated jaws can be used for clamping. Suitable packing materials can be used in the jaws (i.e. paper, leather, plastics or rubber) to avoid slip or damage during clamping. Where the test piece slips asymmetrically or slips by more than 2 mm, the results need to be discarded. To avoid slippage of smooth fabrics, capstan or self-locking jaws with an appropriate clamping face may be used.
5. *Jaw break.* Jaw break often happens before the fabric is stretched to its full potential. The test result should be discarded if the test piece breaks within 5 mm of the jaw face. In the case of a repeated jaw break, modification of the jaw material or clamping force should be considered.

Standards commonly used for tensile strength tests are as follows:

- ISO 13934-1:1999 Textiles – Tensile properties of fabrics – Part 1: Determination of maximum force and elongation at maximum force using the strip method
- ISO 13934-2:1999 Textiles – Tensile properties of fabrics – Part 2: Determination of maximum force using the grab method
- ASTM D5034-95 Standard test method for breaking strength and elongation of textile fabrics (grab test)
- ASTM D5035-95 Standard test method for breaking strength and elongation of textile fabrics (strip test)
- AS 2001.2.3.1-2001 Physical tests – Determination of maximum force and elongation at maximum force using the strip method
- AS 2001.2.3.2-2001 Physical tests – Determination of maximum force using the grab method
- AS 4878.6-2001 Determination of tensile strength and elongation at break for coated fabrics.

4.3.2 Tear strength

Tearing of a fabric can occur in a wide range of products and is involved in fatigue and abrasion processes as well as the catastrophic growth of a cut on application of a force. Tear strength is the tensile force required to start, continue or propagate a tear in a fabric under specified conditions. A tear strength test is often required for woven fabrics used for applications including army clothing, tenting, sails, umbrellas and hammocks. It may also be used for coated fabrics to evaluate brittleness and serviceability.

Methods for testing tear strength

The following methods are in use or being developed: trouser or single tear, double or tongue tear, wing tear, trapezoidal tear, ballistic pendulum (Elmendorf), puncture or snag tear, tack tear, and wounded burst tear. The test specimen shall be cut according to the design shown in Fig. 4.4, and the required dimensions are specified in relevant test standards.

The standards used worldwide for tear tests are:

- ISO 4674-1998, part 1: Determination of tear resistance
- ISO 13937-3-2000 Textiles – Tear properties of fabrics – Part 3: Determination of tear force of wing-shaped test specimens

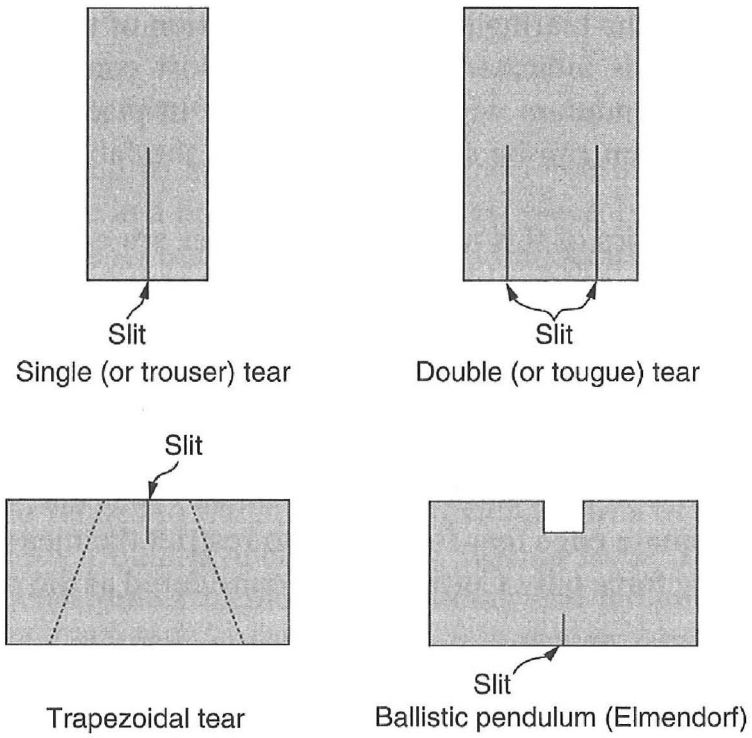

4.4 Different tear testing methods.

- ISO 13937-1-2000 Textiles – Tear properties of fabrics – Part 1: Determination of tear force using the ballistic pendulum method (Elmendorf)
- BS 3424 Method 7C, Single tear, 1973
- EN 1875-3 Determination of tear resistance – Part 3: Trapezoid tear, 1997
- ASTM D1423-83 Tear resistance of woven fabrics by falling pendulum (Elmendorf)
- ASTM D751 Tack tear, 1995
- ASTM D751 Puncture resistance, 1995
- ISO 5473 Determination of crush resistance, 1997
- AS 2001.2.10-1986 Determination of the tear resistance of woven textile fabrics by the wing-rip method
- AS 2001.2.8-2001 Determination of tear force of fabrics using the ballistic pendulum method (Elmendorf).

Two devices have been commonly used for tearing tests: the Elmendorf tearing tester and the CRE tester.

The Elmendorf tearing tester

The falling (ballistic) pendulum (Elmendorf) method is used for the determination of the average force required to continue or propagate a single-rip-type tear starting from a cut in a woven fabric by means of a falling pendulum (Elmendorf) apparatus. Part of the energy stored in the pendulum is used to produce the tearing (and any deformation of the test piece). The magnitude of this is indicated by the energy lost compared to the energy of the falling pendulum without a test piece in place. The weight attached to the pendulum can be selected based on the fabric tested and the standard used.

The basic characteristics of this test are that stresses are applied by subjecting the test piece to a sudden blow; hence the test speed (strain rate) is relatively high compared to that of a CRE machine (see below). This method is not suitable for knitted fabrics, felts or non-woven fabrics. It is applicable to treated and untreated woven fabrics, including those heavily sized, coated or resin treated.

An initial slit is made in the centre of the specimen. The principal reason for this slit is to eliminate edge tear forces and to restrict the measurement to the internal tearing force only. Cutting can be considered as the precursor to tearing.

The constant-rate-of-extension tester

The tear test can be performed on a normal tensile instrument. For the tongue method a rectangular specimen is cut in the centre of the shorter

edge to form two 'tongues' (or 'tails'). Each tongue is gripped in the clamps of a constant-rate-of-extension (CRE) machine and pulled to simulate a rip. The force to continue the tear is calculated from readings as the average force to tear.

The force registered in a tear test is irregular. The reading represents the force required for tear initiation, the subsequent reading being the force to propagate the tear. For a woven fabric, the average of the warp and weft direction tests is given as the result. The tearing force can rise rapidly; therefore the response characteristics of the apparatus are particularly important. The rate of tear is normally 100 mm/min.

The different tests in part reflect the different stress concentrations found in different products, but in many cases they are somewhat arbitrary. Consequently, the measured tear strength is not an intrinsic property of the material, and it can be difficult to correlate directly the results of laboratory tests with service performance.

The main problems encountered in carrying out tear testing are that sometimes the tear does not propagate in the direction of the jaw traverse. Tearing can occur towards the sample edge. In the tongue or double slit test, the tongue may be stretched and a tensile effect occurs, or threads may get pulled out rather than break. Under these conditions an alternative specimen shape may be chosen or a larger test piece taken and the procedure repeated. Non-woven and knitted substrates are often tested using larger samples than those initially specified in the method.

Factors affecting the tear strength

In a normal pull to break tensile test the force measured is the force to produce failure in a nominally flawless test piece. In a tear test, the force is not applied evenly but concentrated on a deliberate flaw or sharp discontinuity. In this case the force to produce a continuously new surface is measured. The force to start or maintain tearing will depend on the geometry of the test piece and the nature of the discontinuity.

The main factors that affect tear strength are yarn properties and fabric structure. The mechanism of fabric tearing is different from linear tensile failure and relates to the ability of individual yarns to slide, pack together or 'jam' into a bundle, increasing the tearing force. Thus an open fabric structure contributes to more yarn sliding and jamming, and higher tear strength. An increase in yarn density in a woven fabric will decrease the tear strength of a fabric as yarns are broken individually as they have more restriction, preventing yarn slide.

A tightly mounted fabric is easier to tear than a slackly mounted fabric because the tear force propagates from yarn to yarn as the linear force in

the yarn restricts yarn slide. Staple yarn has a lower tear strength compared to filament yarn. In a trapezoid tear test, an increase in ends and picks increases tear strength. Tear resistance can also be affected considerably by the speed of the test.

4.3.3 Seam strength

The quality and performance of a sewn garment depend on seam strength and seam slippage along with appearance and other mechanical properties. Failure of the seams of the garment by breaking of the sewing thread or by seam slippage affects serviceability. The strength of the seam or its ability to resist seam opening is an important fabric property and is needed to determine seam efficiency and the optimum sewing conditions. These can include seam type, stitch type, number of stitches per unit length of seam, sewing thread size and needle size.

Seam strength relates to the force required to break the stitching thread at the line of stitching. It is often used to test the strength of a sewing thread or test joins in strong industrial fabrics.

Seam slippage is defined as the tendency for a seam to open due to the application of a force perpendicular to the seam direction. It is a measure of the yarn slippage in a fabric at the seam. Sometimes it refers to breakage of the thread used to stitch the seam. The seam slippage test is also referred to as the seam opening test. Seam slippage may occur in a garment or household item for different reasons, including:

- a low number of warp or weft threads in relation to particular yarn and fabric construction characteristics
- seam allowance too small
- high force requirements placed on the seam due to use
- improper seam selection or construction
- insufficient elasticity of the seam.

Methods for testing seam strength and seam slippage

The CRE machine is normally used and the test specimen is held the same way as in a conventional grab test. The sewn seams may be taken from sewn articles such as garments or may be prepared from fabric samples.

Seam strength

There are two geometries used for the seam strength test, transverse and longitudinal, and these are shown in Fig. 4.5. The transverse direction (Method A) is applicable to relatively inextensible fabrics, such as woven

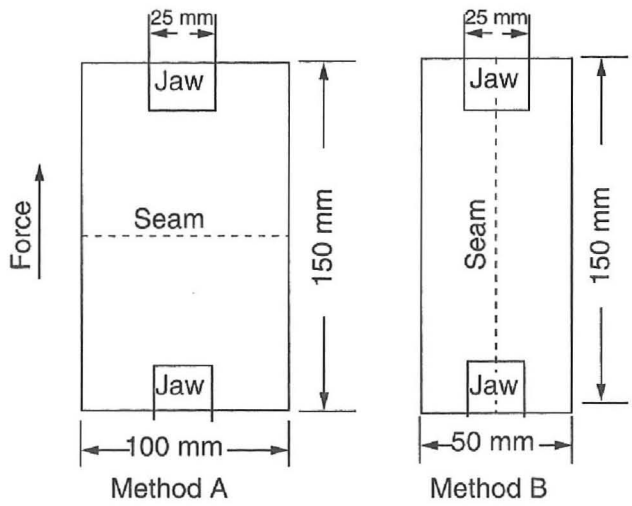

4.5 Seam strength tests.

and stable warp knit structures. The longitudinal direction (Method B) is applicable to extensible fabrics, such as knitted, elastic and highly resilient fabrics. Sample preparation is different for tests in the transverse direction compared to the longitudinal direction as shown in Fig. 4.5. A straight rather than curved seam line is required for a test in the longitudinal direction. The seam line of the seamed samples must be parallel to either the warp or weft yarns.

The test specimen is mounted centrally between the upper and lower jaws with the seam perpendicular or parallel to the jaws depending on the test method. The sample is then stretched at a constant rate until rupture occurs. In a traverse test this is when the seam ruptures, and in the longitudinal test this is when the first sign of seam rupture occurs. In the case of stitched seams, this implies the first stitch breakage. The maximum force applied to the specimen is recorded for both methods as the seam breaking force. If the fabric ruptures prior to the seam rupturing, then a statement to this effect should be made in the test report. If the specimen slips in the jaws or breaks in or at the jaws, the test result for that specimen must be discarded.

Seam slippage

Specimens for seam slippage tests are prepared according to the following steps:

1. Cut the fabric sample to rectangular specimens 175 ± 100 mm for both warp and weft directions.
2. Fold the specimens in half by placing the two shorter edges together and sew a lockstitch seam parallel to and at a distance of 12 ± 1 mm from the fold.
3. Cut the specimen along the fold after sewing.

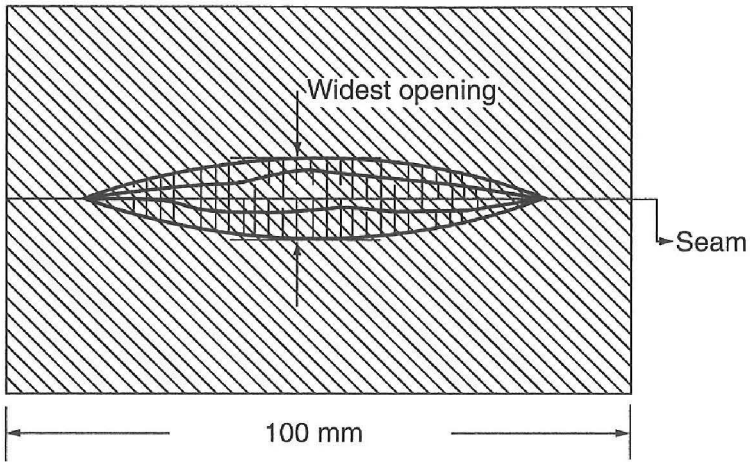

4.6 Measurement of seam opening.

Preparation of sewn seam test specimens from fabric samples requires prior specification of sewing details. These can be taken directly from the standard or can be set by the parties interested in the test results. These details often vary with the fabric end-use and include seam allowance (seam width), stitch type, stitch frequency, needle size and tread parameters.

The machine setup for the seam slippage test is similar to that for the seam strength test, except that a cross-head speed of 50 mm/min is usually used. The specimen is mounted centrally in the width of each set of jaws with the seam midway between and parallel to the horizontal edges of the jaws. The load is then increased until the selected load is reached. The jaw movement is stopped at that point, and the width of the seam opening at its widest place is measured to the nearest 0.5 mm within 10 seconds, in the direction of the applied force (Fig. 4.6). Then the force on the specimen is reduced to 2.5 N and after an interval of 2 minutes the seam opening at its widest place is re-measured. The measuring device can be a small transparent rule or a divider.

An alternative method is to increase the load until a seam opening of 6 mm is reached, at which point the load is recorded for each specimen. This method is applied to a single seam on woven fabrics. If a sample from a commercial garment has multiple seams, then an opening of 3 mm is used.

The standards commonly used for seam tests are as follows:

- ASTM D1683 Standard test method for failure in sewn seams of woven fabrics, 1990
- ASTM D751 Seam strength, 1995
- BS 3320:1988 Method for determination of slippage resistance of yarns in woven fabrics: Seam method

- AS 2001.2.20-2004 Determination of seam breaking force
- AS 2001.2.22-2006 Physical tests – Determination of yarn slippage in woven fabric at a standard stitched seam.

4.3.4 Burst strength

Burst strength testing is the application of a perpendicular force to a fabric until it ruptures. The force is normally applied using either a ball or a hydraulically expanded diaphragm. The fabric is clamped in place around the device that applies the force by a circular ring. The material is stressed in all directions at the same time regardless of the fabric construction. Ball burst testing is used as an alternative to tensile testing for materials that are not easily prepared for tensile testing or have poor reproducibility when tensile tested. These fabrics include knits, lace, non-wovens and felts.

There are fabrics which are simultaneously stressed in all directions during service, such as parachute fabrics, filters, sacks and net. A fabric is more likely to fail by bursting in service than it is to break by a straight tensile fracture, as this is the type of stress that is present at the elbows and knees of clothing. Results obtained from tensile and burst testing are not directly comparable.

When a fabric fails during a bursting strength test, it does so across the direction which has the lowest breaking extension. When a burst test is undertaken, all directions in the fabric undergo the same extension, so the fabric direction with the lowest extension at break is the one that will fail first. This is not necessarily the direction with the lowest strength. Elongation cannot be determined from a burst strength test.

Methods for testing burst strength

Ball burst method

The ball burst method uses a CRE machine to apply the perpendicular force. The attachment for the CRE machine comprises two parts: a lower fixed clamping device of fixed aperture diameter and an upper moving ball that impacts on the fabric surface. The clamping device has an upper and a lower clamp with concentric grooves and crowns that intermesh with the test piece to provide grip. Test specimens can be cut into square or circular pieces, but must be of sufficient size to protrude outside the annular rings around the complete circumference of the lower clamp. The face of the rings should be perpendicular to the direction of the application of the force. The centre portion pushes against a polished steel ball at a constant rate until it ruptures. The burst strength is then calculated from the force of rupture F and the internal cross-sectional area A of the test piece, F/A. Current

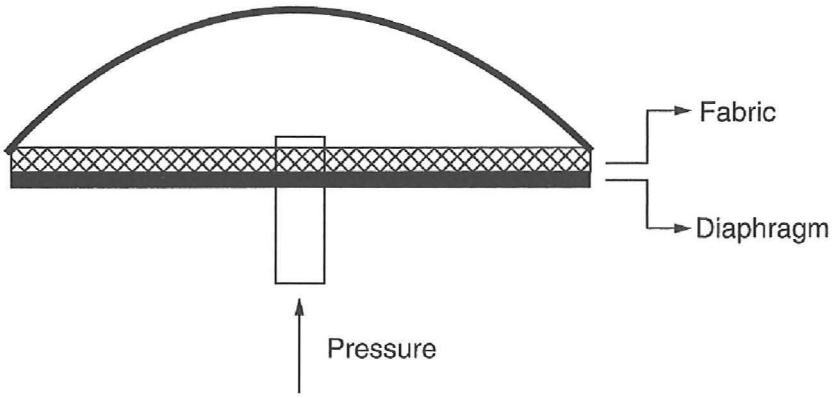

4.7 Simple principle of hydraulic diaphragm method.

research shows that a larger ball diameter of 38 mm would improve reproducibility; however, most standards still use a 25 mm diameter ball.

Hydraulic diaphragm method

The hydraulic diaphragm test method uses a diaphragm inflated by hydraulic pressure to apply the perpendicular force to the fabric. The aperture size is normally different from that used for ball burst tests. The diaphragm, normally made of rubber, is mounted below the clamped test piece (Fig. 4.7). The clamping device should provide distributed pressure sufficient to prevent specimen slippage during a test. During a test hydraulic fluid is introduced behind the rubber diaphragm at a known rate and the burst pressure (M) at rupture is measured using a pressure gauge. The upper clamp and sample is then removed and the tare pressure (T) to distend the diaphragm is recorded. The tare pressure (T) is subtracted from the burst pressure at rupture (M) to give the actual burst pressure (B) of the test piece, viz. $B = M - T$. The burst pressure is expressed in kilopascals. From this method, bursting distension can be measured in millimetres, immediately prior to rupture, from the height change of the centre of the upper surface above the starting plane.

The above two methods are set out for determining the bursting pressure of both wet and dry fabrics. The two methods may not give the same results, as the mechanism of force application is slightly different between the two test apparatus.

The relevant standards commonly used are listed below:

- ISO 3303-1995 Determination of bursting strength
- ISO 2960 Textiles – Determination of bursting strength and bursting distension – Diaphragm method
- BS 4768 Method for determination of the bursting strength and bursting distension of fabrics

- BS 3424 Methods of test for coated fabrics – Wounded burst test
- ASTM D3787 Standard test method for bursting strength of knitted goods – constant-rate-of-traverse (CRT) ball burst test
- AS 2001.2.19-1998 Determination of bursting force of textile fabrics – Ball burst method
- AS 2001.2.4-1990 Physical tests – Determination of bursting pressure of textile fabrics – Hydraulic diaphragm method.

4.4 Fabric stretch properties

These properties are particularly important for elastic fabric and stretch fabric. Elastic or elastomeric fabric is made from an elastomer either alone or in combination with other textile material. Elastomers include polymers such as rubber, polybutadiene, polyisobutylene and polyurethanes. Because the glass transition temperature of these polymers is below room temperature, these materials are soft or rubbery at room temperature and can easily return to their original shape after stretching. Due to the nature of these materials they do not always return to their original shape after prolonged deformation. Tests should measure size change (kickback) after long periods of extension. The tension to stretch an elastic material and the percentage stretch achievable are also important variables to be measured.

Stretch fabric is usually accomplished by incorporating a small percentage of elastomeric fibres or filaments into a conventional woven or knitted textile fabric. Stretch fabric can also be achieved without elastromeric fibres by fabric construction or yarn selection. There are two types of stretch fabrics: comfort stretch (5–30%) and power stretch (30–50%) (Lyle, 1977). Comfort stretch fabrics are designed for low loads, and power stretch for considerably higher loads. Stretch is important in sportswear such as swimwear or other active sports clothing, which is required to be a close fit to the body. The stretch requirements of a fabric can be gauged from the typical values of stretch that are encountered during the actions of sitting, bending or flexing of knees and elbows.

Both elastic fabric and stretch fabric require good elasticity; consequently fabric tends to recover its original size and shape immediately after removal of the force causing deformation. The three main factors of interest when testing a fabric with recoverable elongation are elongation at load, force for elongation, and recovery after load.

- Elongation at load is the amount that a fabric stretches in length from its original length after a fixed load is applied. This is commonly used to define the level of stretch within the fabric. Woven fabrics have much less stretch than knitted fabrics.

- Force for elongation defines the amount of force required to extend a fabric a certain distance in elongation. It can be called power or tension of the fabric at elongation and is important for comfort factors in garment design.
- Recovery after load is the amount a fabric returns to its original dimensions after the elongation load is released.

Recovery is possibly the most important factor as it defines whether a fabric is stretch or not. Fabrics without elastic properties are often tested for stretch and recovery to quantify the effect of stretching the fabric in use. A 100% cotton single jersey fabric will generally stretch significantly when a load is applied; however, its recovery after stretch is poor. The addition of an elastomeric fibre will increase the level of recovery, which can then define this fabric as a stretch fabric.

Recovery is often measured after a long period of load. Elastomers can break down when loaded for a long time. This is observed as a loss in fabric recovery or tension at load. This type of test is often used for elastic tapes or fabrics where the tension is an integral part of the garment design. An example is underwear where the product is rendered useless if the elastic waistband no longer holds the garment in place.

There are two main ways by which fabrics are measured for stretch and recovery. These are dynamic and static measurements. In dynamic measurement the fabric is applied with a fixed load or a fixed extension at a controlled rate of extension. Dynamic measurements can be cycled through a series of extensions before the results are taken. The CRE machine is an example of a machine used for dynamic testing. Dynamic tests generally measure tension at elongation as well as elongation and relaxation.

A static test is conducted by clamping one end of a fabric on a flat plane. The other end is then displaced by applying a fixed load or by stretching to a set elongation. Static tests generally only provide elongation and load information. However, they are commonly used to measure recovery after a long period of loading.

4.4.1 Methods for testing fabric stretch

Test for elongation of elastic fabric

When a CRE machine is used for testing tension and elongation of an elastic fabric, a straight wide or narrow elastic fabric, or a loop specimen, is prepared. The specified loads and cross-head speeds are applied to cycle (loading and unloading) the fabric for a required number. For low elongation fabrics (below 100%), use of a slower cross-head speed should be agreed. Three properties should be examined: elongation (percentage stretch), tension (power) and recovery.

Test for fabric stretch

There are a number of tests devised for stretch fabrics by various organisations, all following similar procedures but differing widely in many of the important details, such as load applied, number of stretch cycles before the actual measurements, time held at the fixed load, and time allowed for recovery. Here are some comparisons between the BS 4952:1992 and ASTM D3107-1980 standards. Two quantities are generally measured:

- The extension at a given load, which is a measure of how easily the fabric stretches
- Growth or residual extension, which measures how well the fabric recovers from stretching to this load.

In the British standard (BS4952:1992), five specimens from warp and weft directions each are tested. Two different dimensions of specimen in clamps are required for woven and knitted fabrics respectively: a width of 75 mm for both woven and knit, and a gauge length of 75 mm for knit and 200 mm for woven (as L_1). The fabric is to be stretched at a specified force (30 N for knit and 60 N for woven) at a rate of 100 mm/min, and the load is maintained for 10 s; the extension (cross-head movement) is then recorded as L_2. The sample is removed from the clamps and allowed to relax on a flat, smooth surface and its length is re-measured after 1 min as L_3. If a longer period of relaxation is required, the length is re-measured as L_4 after 30 min. The stretch and recovery results can be calculated as follows:

Stretch:

$$\text{Mean extension percent, } E = 100L_2/L_1 \qquad 4.3$$

Recovery:

$$\text{Mean residual extension after 1 min, } R_1 = 100(L_3 - L_1)/L_1 \qquad 4.4$$

$$\text{Mean residual extension after 30 min, } R_{30} = 100(L_4 - L_1)/L_1 \qquad 4.5$$

In the American standard (ASTM D3107-1980), apart from the different sample size for woven (width of 51 mm and gauge length of 500 mm), a weight of 1.8 kg also hangs at the bottom clamp. Both edges of the clamps are marked as the lower and top bench marks, and the original distance between the two marks is recorded as length A. The fabric specimen is stretched by cycling three times from 0 to 1.8 kg load with 5 s interval, then the full load is applied at the fourth time and the extension (B) is then measured. Afterwards, the weight and bottom clamp are removed and the distance between the two marks is measured after 30 s as C. The percentage fabric stretch and immediate fabric growth are calculated as follows:

$$\text{Fabric stretch percent} = \frac{B-A}{A} \times 100 \qquad 4.6$$

$$\text{Fabric growth percent} = \frac{C-A}{A} \times 100 \qquad 4.7$$

Standards commonly used for the stretch test are as follows:

- ASTM D2594-2004 Standard test method for stretch properties of knitted fabrics having low power
- ASTM D3107-1980 Standard test method for stretch properties of fabrics woven from stretch yarns
- ASTM D6614-2007 Standard test method for stretch properties of textile fabrics – CRE method
- BS 4952-1992 Methods of test for elastic fabrics.

4.5 Fabric abrasion resistance

Abrasion is defined as the wearing away of any part of the fabric by rubbing against another surface. Fabrics are subjected to abrasion during their lifetimes and this may result in wear, deterioration, damage and a loss of performance. However, the abrasion resistance is only one of several factors contributing to wear performance or durability. Abrasion can occur in many ways and can include fabric to fabric rubbing when sitting, fabric to ground abrasion during crawling, and sand being rubbed into upholstery fabric, and it is difficult to correlate conditions of abrasion of a textile in wear or use with laboratory tests. This may explain the reason why there are many different types of abrasion testing machines, abradants, testing conditions, testing procedures, methods of evaluation of abrasion resistance and interpretation of results.

The methods used may be described by the equipment, the test head movement or testing device setup. These include (a) inflated diaphragm; (b) flexing and abrasion (i.e. the Stoll Flex Tester); (c) oscillatory cylinder; (d) rotary platform; (e) uniform abrasion; and (f) impeller tumble. Presentations of the fabric to the abradant include in plane (or flat), flex, tumble or edge abrasion or a combination of more than one of these factors.

There are two general approaches for assessment of abrasion resistance: (1) to abrade the sample until a predetermined end-point is reached, such as the breaking of two threads or the generation of a hole, while recording the time or number of cycles to achieve this; and (2) to abrade for a set time or number of cycles and assess the fabric for change in appearance, loss of mass, loss of strength, change in thickness or other relevant property. The length of the test for the first approach is indeterminate and requires the sample to be regularly examined for failure. This need for examination

is time consuming as the test may last for a long time. The second approach provides for simpler measurements; however, the change in properties such as mass loss can be slight.

4.5.1 Factors affecting abrasion resistance

A fabric's resistance to abrasion is affected by many factors, such as fibre type, the inherent mechanical properties of the fibres, the dimensions of the fibres, the structure of the yarns, the construction and thickness of the fabrics, and the type and amount of finishing material added to the fibres, yarns or fabrics.

For example, fibres with high elongation, elastic recovery and work of rupture have a good ability to withstand repeated distortion, hence a good degree of abrasion resistance. Nylon is generally considered to have the best abrasion resistance, followed by polyester, polypropylene, wool, cotton and acrylic. Longer fibres incorporated into a fabric confer better abrasion resistance than short fibres because it is harder to liberate them from the fabric structure. Flat plain weave fabrics have better abrasion resistance than other weaves because the yarns are more tightly locked in a plain weave structure and the wear is spread more evenly over all of the yarns in the fabric. Fabrics with a loose structure have a lower abrasion resistance than those with a tight structure.

The resistance to abrasion is also greatly affected by the conditions of the tests, such as the nature of the abradant, variable action of the abradant over the area of specimen abraded, the tension of the specimen, the pressure between the specimen and the abradant, and the condition of the specimen (wet or dry).

Abradants can consist of anything that will cause wear. The most common solid abradants are abrasive wheels (vitreous and resilient), abrasive papers or other fabrics, stones (aluminium oxide or silicon carbide) and metal 'knives'. The nature of abradants and the type of action will control the severity of the test. It is important that the action of the abradant should be constant throughout the test and the tension of the mounted specimen should be reproducible, as this determines the degree of mobility of the sample during abrasion. The pressure between the abradant and the sample affects the severity and rate at which abrasion occurs. Accelerated destruction of test samples through increased pressure or other factors such as heat generation may lead to false conclusions on fabric behaviour.

4.5.2 Methods for testing abrasion resistance

Three methods have been widely used over the years: the Martindale tester, the Taber abrader (rotary platform double-head abrader) and the accelerator.

The Martindale tester

The Martindale tester is designed to give a controlled amount of abrasion between fabric surfaces at comparatively low pressures in continuously changing directions. The results required determine the test and assessment method used. Assessments can include determination of specimen breakdown, mass loss or appearance change.

For the methods applying assessment of specimen breakdown or mass loss, specimens are circular of either 38 mm or 140 mm in diameter. Normally the abradant is silicon carbide paper or woven worsted wool mounted over felt. The small test specimen is sitting on the large abradant and then cycled backwards and forwards in a Lissajous motion producing even wear. A force of either 9 or 12 kPa is applied to the top of the specimen to hold it against the abradant. If assessment of appearance change needs to be carried out, then larger test pieces (140 mm in diameter) are required. The roles are reversed and the abradant is placed in the holder with the specimen as the base platform. The standard abradant should be replaced at the start of each test and after 50000 cycles if the test is to be continued beyond this number. Behind the abradant is a standard backing felt which is replaced at longer intervals.

For assessment, the specimen is examined at suitable intervals to see whether two threads have broken, mass has changed or appearance has changed. Different fabric structures or components will require different inspection intervals. Some bias may occur if a fabric has a low abrasion resistance. Hosiery may be tested using a modified specimen holder, which stretches the knitted material, thus effectively accelerating the test. A flattened rubber ball is pushed through the sample as the holder is tightened, thus stretching it.

The Taber abrader

The rotary platform abrader (Taber abrader) applies two abrasive wheels (13 mm thick and 51 mm in diameter) under controlled pressure to a circular sample (110 mm in diameter) mounted on a rotating table or platform. The fabric is subjected to the wear action by two abrasive wheels pressing onto a rotating sample. The wheels are arranged at diametrically opposite sides of the sample so that they are rotated in the opposite direction by the rotation of the sample. These are available in different abrasive grain sizes. The load used can be 125, 250, 500 or 1000 g (or 1.23, 2.45, 4.9 or 9.81 N). The test specimen is abraded until damage (broken threads or hole) occurs or there is a visual change in the surface appearance (loss of texture, pile

or surface coating). The number of cycles is recorded when the end point is reached.

The accelerator abrasion tester

The accelerator abrasion tester has an action that is quite different from most other abrasion testers. In the test a free fabric specimen is driven by a rotor inside a circular chamber lined with an abrasive cloth. The specimen suffers abrasion by rubbing against itself as well as the liner. Evaluation is made on the basis of either weight loss of the specimen or the loss in grab strength of the specimen broken at an abraded edge. For evaluation by loss in strength, two specimens measuring 100 mm × 300 mm are used for grab tests. Each specimen is numbered at both ends and then cut in half. One half is used for determining the original grab strength and the other half for determining the grab strength after abrading.

Many different standards are used worldwide for abrasion resistance tests, including:

- ASTM D3884 Standard guide for abrasion resistance of textile fabrics (rotary platform, double-head method)
- ASTM D4966-1998(R04) Standard test method for abrasion resistance of textile fabrics (Martindale abrasion tester method)
- ISO 12947-1-1998 Textiles – Determination of the abrasion resistance of fabrics by the Martindale method – Part 1: Martindale abrasion testing apparatus
- ISO 12947-2-1998 Textiles – Determination of the abrasion resistance of fabrics by the Martindale method – Part 2: Determination of specimen breakdown
- AS 2001.2.25.1-2006 Physical tests – Determination of the abrasion resistance of fabrics by the Martindale method – Martindale abrasion testing apparatus
- AS 2001.2.25.2-2006 Physical tests – Determination of the abrasion resistance of fabrics by the Martindale method – Determination of specimen breakdown
- AS 2001.2.25.3-2006 Physical tests – Determination of the abrasion resistance of fabrics by the Martindale method – Determination of mass loss
- AS 2001.2.25.4-2006 Physical tests – Determination of the abrasion resistance of fabrics by the Martindale method – Assessment of appearance change
- AS 2001.2.26-1990 Physical tests – Determination of flat abrasion resistance of textile fabrics (flexing and abrasion method)

- AS 2001.2.27-1990 Physical tests – Determination of abrasion resistance of textile fabrics (inflated diaphragm method)
- AS 2001.2.28-1992 Physical tests – Determination of abrasion resistance of textile fabrics (rotary platform, double-head method)
- AS 2001.2.30-1994 Physical tests – Determination of abrasion resistance of coated textile fabrics (oscillatory cylinder method).

4.6 Testing the aesthetic properties of fabrics

Fabric aesthetic properties include the optimised handle of fabric, good appearance in the garment and good appearance in wear. Fabric properties like thickness, compressibility, bending properties, extensibility, dimensional stability and surface properties are associated with fabric aesthetics. Generally, the aesthetic characteristics of fabrics can be measured by a mixture of subjective evaluation and objective tests.

When assessing fabric handle subjectively, the assessor usually strokes the fabric surface with one or several fingers and then squashes the fabric gently in the hand. Subjective characteristics are assessed by the sensations of smoothness or roughness, hardness or softness, stiffness or limpness. These feelings may determine whether a fabric is comfortable or uncomfortable to a wearer. However, there are many factors that influence the characters of a fabric observed through handling, for instance the type of fabric being assessed, which may be different in the material used, and differences in fabric structure made specially for apparel, upholstery or industrial uses. This subjective hand evaluation system requires years of experience and can obviously be influenced by the personal preferences of the assessor. A fabric may feel light, soft, mellow, smooth, crisp, heavy, harsh, rough, furry, fuzzy or downy soft. So there is a need to replace the subjective assessment of fabrics by experts with an objective machine-based system which will give consistent and reproducible results.

The theoretical primary hand values (PHV) of a fabric can be calculated from its mechanical properties according to the Kawabata method (Kawabata, 1980). The PHV values include *koshi* (stiffness), *shari* (crispness) and *fukurami* (fullness and softness). These hand values relate to the shear and bending properties, and consequently to the inherent fibre properties and fabric geometry. The Kawabata Evaluation System for Fabric (KES-F) consists of four specialised instruments: FB1 for tensile and shearing, FB2 for bending, FB3 for compression and FB4 for surface friction and variation. A total of 16 parameters are measured at low levels of force. The measurements are intended to mimic the fabric deformations found in use.

A set of the Fabric Assurance by Simple Testing (SiroFAST) instruments developed in Australia is used to measure the mechanical properties of

wool fabrics and to predict their tailoring performance. SiroFAST gives similar information on the aesthetic characteristics of fabric as KES-F does, but in a simple manner, and is more suited to a mill environment. The SiroFAST system includes SiroFAST-1 for thickness, SiroFAST-2 for bending, SiroFAST-3 for extensibility and SiroFAST-4 for dimensional stability. The SiroFAST PressTest has also been added to complement these tests. Through the objective measurements of fabric and a data set on a chart or 'fingerprint', manufacturers can identify fabric faults, predict the consequences of those faults and identify re-finishing routes or changes in production.

The tests considered relevant to fabric hand in this chapter include drape, bending, shearing and compressibility. Different testing methods applied over many years are compared in the following sections.

4.6.1 Fabric drape

Drape is the term used to describe the way a fabric hangs under its own weight. Fabric drapability is an important factor from an aesthetic point of view. The quality of 'drape' is important to a designer as it influences a garment's appearance. The draping qualities required from a fabric will differ depending on its end use, e.g. knitted fabrics are relatively floppy and garments made from them will tend to follow the body contours. Woven fabrics are stiffer than knitted fabrics, so they are used in tailored clothing where the fabric hangs away from the body and disguises its contours. Uses such as curtains, tablecloths or women's clothing need to exhibit good drape shape and appearance. Good draping leads to the fitting of a fabric over a surface without undesirable wrinkling or tearing. Measurement of a fabric's drape assesses its ability to hang in graceful curves.

The drape coefficient (F) has been developed to describe the degree of drape and drape shape (configuration, modality). A lower F value means the fabric is softer, and its drapability is better. In other words, the higher the drape coefficient (F) the stiffer the fabric is. The drape coefficient is relevant to the drapability of fabrics but is not sufficient for characterising drape formation. Fabrics with the same drape coefficients may form different drape shapes. Hence other parameters such as number of nodes (folds) and node dimensions are also used to describe the drape quality.

The drape formation process is experimentally found to consist of three stages (Mizutani *et al.*, 2005): node generation (node appearance in the early stage), development (drapes growing from these nodes) and stabilisation (static stabilised drapes). The generation of nodes and the development process must be considered in relation to the mechanical properties of the fabrics.

When a fabric is draped, it deforms with multidirectional curvature. Draping qualities are related to fabric bending stiffness and shear properties. Factors such as fibre content, yarn structure, fabric structure and type of finish affect the drape behaviour. For example, fabric thickness (T) affects drape in different ways (Chen *et al.*, 2005): when $T < 0.4$ mm, increasing T causes a decrease in F because the weight effect imparts more influence than rigidity and flexibility at these thicknesses. This factor is reversed for $0.4 < T < 0.8$ mm, as changes in bending rigidity influence F more, causing it to rise with increased thickness. When $T > 0.8$ mm, the fabric is rigid, so the drapability is poor.

Methods for testing fabric drapability

Drape test systems currently used worldwide include the Peirce's cantilever method, the Rotrakote-CUSICK drape tester, the Fabric Research Liberating method (FRL drapemeter) (Japan), and the 3D body scanner.

The cantilever method measures fabric bending characteristics and then converts them into a measure of fabric drape. The FRL drapemeter also works on a similar principle. The cantilever method and FRL drapemeter only reflect a fabric's two-dimensional characters, and as fabric drape is actually a three-dimensional phenomenon, they are now less widely used.

The CUSICK drape tester is a simple but apt instrument which uses a parallel beam of light to cast a shadow from a circular piece of fabric, supported by a smaller circular disc. The area of shadow (A_S) is measured and compared with the area of the sample (A_D) and that of the supporting platform (A_d). The drape coefficient F is defined as

$$F = \frac{A_S - A_d}{A_D - A_d} \times 100\% \qquad 4.8$$

In the actual test, the light beam casts a shadow of the draped fabric onto a ring of highly uniform translucent paper supported on a glass screen. The surface drape pattern area on the paper ring is directly proportional to the mass of that area. So the drape coefficient (F) can be calculated in a simple way:

$$F = \frac{\text{mass of shaded area}}{\text{total mass of paper ring}} \times 100\% \qquad 4.9$$

There are three standard diameters of specimen that can be used for different types of fabrics:

- 24 cm for limp fabrics (drape coefficient below 30% with the 30 cm sample)
- 30 cm for medium fabrics
- 36 cm for stiff fabrics (drape coefficient above 85% with the 30 cm sample).

A fabric should be tested initially with a 30 cm specimen in order to see which of the above categories it falls into. When test specimens of different diameter are used, the drape coefficients measured from them are not directly comparable with one another.

The CUSICK drape tester can be fitted with a video camera and computer for instantaneous measurement of the drape coefficient. This is a trend that is adopted by most new drape measurement systems as it enables computer-aided analysis of the drape shape of fabrics and the numbers of nodes. A new apparatus (the drape elevator), designed by Japanese researchers, can also be used to evaluate drape properties continuously during the process of drape formation.

The 3D body scanner is another adaptation of the computer-aided capture of drape characteristics. A circular piece of fabric is hung over a circular disc, which allows the fabric to drape as in a CUSICK drape tester. Two scanners (one rotated 90° from the other) take around 12 seconds to capture the complete configuration (point cloud data) of the draped sample. The captured data is then processed using the Geomagic™ software to generate a 3D surface of the scanned object. The drape coefficient along with other useful drape parameters can be extracted from the processed data.

Intricate software has been developed to utilise the results obtained by electronic drape measurement in the computer design of a textile product. Drape characteristics can be simulated in a range of different designs and applications in both static and dynamic simulations.

4.6.2 Fabric bending

A bending test measures the severity of the flexing action of a material. The test can vary between bending the material sharply to bending it over a large radius and small amplitude. For thin flexible materials such as fabrics, the deformation is always intended to be at constant strain amplitude rather than stress amplitude. Resistance to bending or flexural rigidity is defined as flex stiffness. This property can influence the aesthetic appearance as well as the comfort of a fabric.

The bending length is a measure of the interaction between fabric weight and fabric stiffness in which a fabric bends under its own weight. It reflects the stiffness of a fabric when bent in one plane under the force of gravity, and is one component of drape. Thus bending length is also called drape stiffness.

The bending rigidity, which is related to the perceived stiffness, is calculated from the bending length and mass per unit area. Fabrics with low bending rigidity may exhibit seam pucker and are prone to problems in cutting out. They are difficult to handle on an automated production line. A fabric with a higher bending rigidity may be more manageable

during sewing, resulting in a flat seam, but may cause problems during moulding.

The bending length is dependent on the weight of the fabric and is therefore an important component of the drape of a fabric when it is hanging under its own weight. The stiffness of a fabric in bending is very dependent on its thickness. The thicker the fabric, the stiffer it is, if all other factors remain the same. The bending modulus is independent of the dimensions of the strip tested, so that by analogy with solid materials it is a measure of 'intrinsic stiffness'.

Methods for testing fabric bending

Three methods are often used to test the stiffness of fabrics: the Cantilever test, the hanging loop test and the pure bending test conducted on a KES-FB2 bending tester. These methods are more suitable for testing woven fabrics than for testing knitted ones.

For the Cantilever test (Fig. 4.8), the Shirley Stiffness tester or the Gurley Stiffness tester is commonly used. The tester is based on the cantilever principle. In the test a rectangular strip (25 mm wide × 200 mm long) supported on a horizontal platform is clamped at one end and the rest of the strip is allowed to overhang and bend under its own weight. The bending length (C) is read from a calibrated scale in millimetres when the tip of the specimen reaches a plane inclined at 41.5 degrees. The higher the bending length is, the stiffer the fabric. The bending modulus (q) and the flexural rigidity (G) can be calculated from the bending length, the mass per unit area and fabric thickness:

$$\text{Flexural rigidity } G = 9.8MC^3 \times 10^{-6} (\mu\text{Nm}) \qquad 4.10$$

where C is bending length and M is mass per unit area.

$$\text{Bending modulus } q = \frac{12G \times 10^3}{t^3} (\text{N/m}^2) \qquad 4.11$$

where G is the flexural rigidity and t is the cloth thickness in mm.

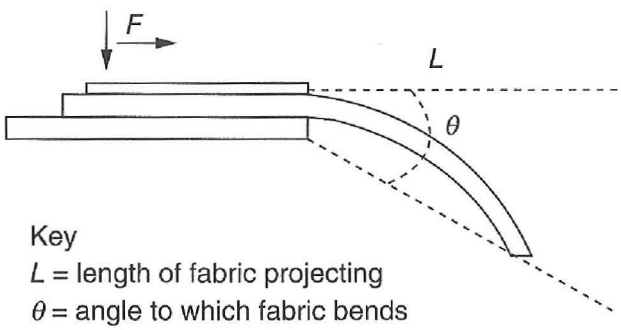

4.8 Cantilever testing principle.

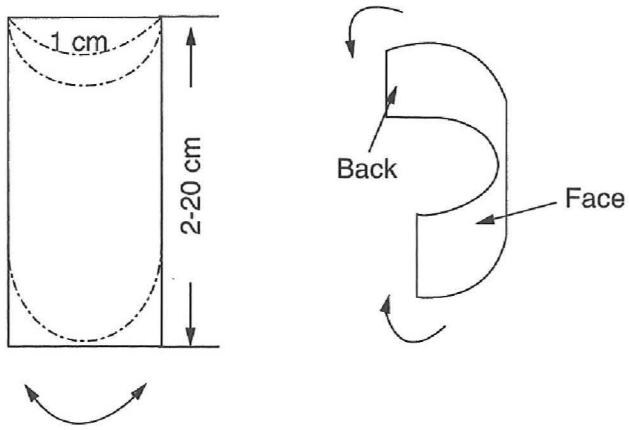

4.9 Pure bending testing principles.

If some fabrics are too flexible or limp, the hanging loop method may be used. Different shapes of hanging loops are used: ring loop, pear loop and heart loop. One end of the fabric is brought against the other end by bending through angles of 180° (pear), 360° (ring) and 540° (heart) and joined together. The length of this loop is measured when it is hanging vertically under its own weight. This hanging length is inversely related to the bending stiffness.

The KES-FB2 bending tester is a different approach used for determining stiffness and hysteresis of fabric specimens under pure bending. The precise bending momentum of the specimen can be detected. A standard size specimen 20 cm × 20 cm is mounted on two clamps (one is fixed and the other is free to move), which have a space of 1 cm between them (Fig. 4.9). The sample is then bent at a constant bending deformation rate of 0.5 cm^{-1}/s through a controlled curve pattern at a fixed torque by moving one of the clamps. The bending moment vs curvature curve can be obtained from the tester.

The digital pneumatic stiffness tester determines fabric stiffness using the ASTM circular bend test method. A plunger of 25.4 mm (1 in) diameter pushes the fabric through a 38 mm (1.5 in) diameter orifice for a distance of 57 mm (2.25 in) in 1.7 seconds and the maximum force is recorded. The machine is provided with a pneumatic cylinder, controls and a battery-operated digital force gauge of 50 kgf, 500 N or 100 lb (switchable) with peak-hold facility.

Standards commonly used for the bending stiffness test are as follows:

- ASTM D1388-2007 Standard test method for stiffness of fabrics
- BSI BS 3356-1991 Determination of bending length and flexural rigidity of fabrics (AMD 6337)
- AS 2001.2.9-1977 Determination of stiffness of cloth.

4.6.3 Fabric shearing

Shear deformation is very common during wear as the fabric needs to be stretched or sheared to various degrees as the body moves. The ability of a fabric to deform by shearing enables fabric to undergo more complex deformations than two-dimensional bending. Shearing enables a fabric to conform to complex shapes, such as the contours of the body in clothing applications. As a shearing force or moment is applied to a fabric, in-plane rotation of the yarns at the cross-over of the weave occurs along with yarn slippage at the interlacing points of warp and weft yarns, causing angle change. The shear mechanism is one of the important properties influencing the draping, pliability and handle of woven fabrics. It also affects their bending and tensile properties in various directions.

The shear behaviour of a woven fabric can be characterised by two shear parameters: shear rigidity and shear hysteresis. Shear rigidity determines fabric stiffness or softness. Fabric with low values of shear rigidity distorts easily, giving rise to difficulties in laying up, marking and cutting. A high value of shear rigidity means that a fabric is difficult to mould. Shear hysteresis is the energy loss when the direction of shear is reversed within a shear deformation cycle. This is due to the fact that when a fabric is sheared, most of the force expended is used in overcoming the frictional forces that exist at the intersection of warp and weft. Shear hysteresis can be related to various handle characteristics such as crispness, scroopiness, and how noisy the fabric is when handled. There is a strong linear relationship between shear rigidity and shear hysteresis.

The shear deformation depends upon the frictional and elastic forces within a fabric, so the values of shear properties are greatly affected by the fabric structure and finishing process. For example, the values of shear rigidity and shear hysteresis increase with the increase in the weft density of woven fabrics. The finishing process releases residual bending stress existing in the yarns, thus it can reduce the shear rigidity of the finished fabric.

Methods for testing fabric shearing

Several simplified methods for testing the shear of fabrics have been developed by workers in this area, i.e. KES-FB1 (Japan) and SiroFAST-3 (Australia) as illustrated in Fig. 4.10. Method (a) in Fig. 4.10 is based on the test principle employed by the KES-F system. A rectangular fabric sample is subjected to a pair of equal and opposite stresses F which are acting parallel to its edges. The fabric deforms to a slant position, though its area remains constant. This is in-plane shear. Figure 4.11 shows a typical shear stress vs shear strain curve. The shear strain is defined as the tangent of the angle θ of shear. That is:

$$\text{Shear strain} = \tan\theta$$

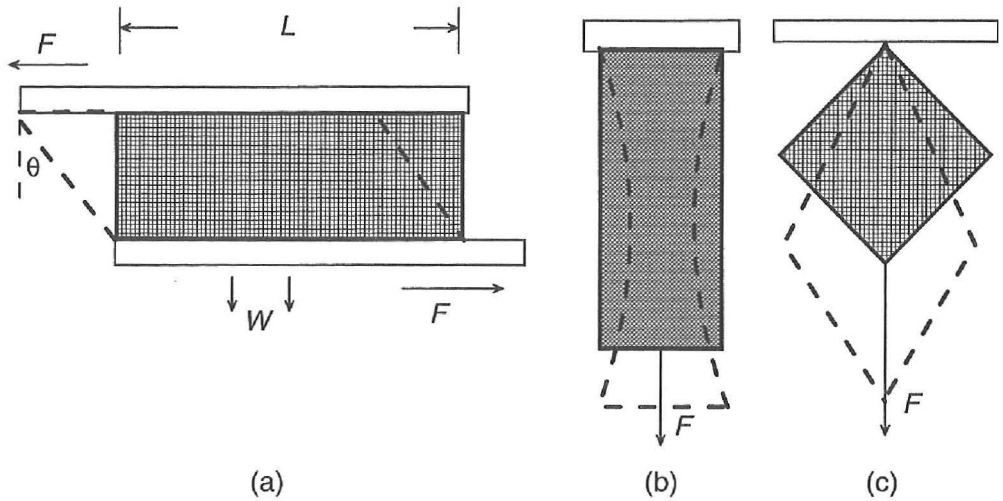

4.10 Shear testing methods.

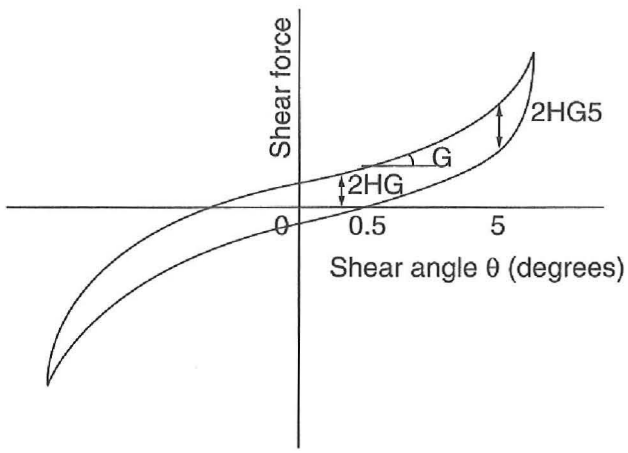

4.11 Shear hysteresis.

The shear rigidity (G) is the slope of the shear stress–strain curve:

$$G = F / \tan\theta$$

However, the shear deformation is not always a simple shear at constant area. Fabrics subjected to compressive forces in the plane of the material tend to buckle at very low values. In order to delay the onset of buckling, a vertical force W is applied to the fabric by using a weighted bottom clamp. The horizontal force F which is required to move the bottom clamp laterally is measured together with the shear angle θ. Then:

$$\text{Effective shear force} = F - W\tan\theta$$

The shear stress is defined as the shearing force divided by the sample width (L). A height:width ratio of 1:10 is considered to be the limit for practical measurements. The shear hysteresis parameters 2HG and 2HG5 are used in this method (2HG = hysteresis of shear forces at 0.5°, 2HG5 = hysteresis of shear forces at 5°).

Although the principle of method (a) in Fig. 4.10 is relatively simple, in practice it can be rather complicated to perform. Because the bias extension to a fabric is actually equivalent to shear, the test for it is easy to carry out on a CRE machine. Methods (b) (based on the test principle of SiroFAST-3) and (c) (a CRE machine can be used) are therefore the most appropriate for industrial use. The uniaxial tension is applied to a bias-cut specimen. Shear rigidity can be calculated from the extension of a fabric in the bias direction. For example, using a 5 gf/cm (or 4.9 N/m) tension (the same as that required in a SiroFAST-3 tester), if the extension on the bias (45°), EB5, is measured in %, then the shear rigidity (G) in N/m is simply calculated as $G = 123/\text{EB5}$.

It has been found experimentally that there were inconsistencies between the fabric properties measured in simple shear and by bias extension, due to a number of factors including the geometry of the test specimen, the assumption in the analysis that the threads were inextensible, and the variation that takes place in the normal stress during bias extension.

4.6.4 Fabric compression

The compression test for fabric is used to determine the fabric thickness at selected loads, and reflects the 'fullness' of a fabric. When measuring compression properties of fabric, it must be appreciated that all fabrics contain air as well as fibres and yarns. When a fabric is compressed, three distinct stages in the deformation of a fabric have been identified (Saville, 1999):

1. Individual fibres protruding from the surface will become bent and/or compressed. The resistance to compression in this region comes from the fibre bending stiffness.
2. The yarns come into close contact and are flattened and straightened, at which point the inter-yarn and inter-fibre friction as well as the yarns' bending stiffness provide the resistance to compression until the fibres are all in contact with one another.
3. The yarns are compacted, and the individual fibres are squashed against each other. The resistance is controlled mainly by the transverse properties (or lateral compression) of the fibres themselves.

These stages of compression involve elastic deformation, frictional forces and also elastic recovery of the fibres from bending and lateral compression. So the compression property contains information about the handle of the fabric. The greater the radius of curvature of the transition between the first and third stages, the softer is the fabric in compression.

Methods for testing fabric compression

The SiroFAST-1 compression meter and the KES-FB3 compression instrument are commonly used for measuring fabric thickness and compressibility. Older methods may rely on making direct observations of the fabric cross-section using a microscope, but these have mostly been abandoned because of the difficulty of identifying the edges of the fabric sample.

In the SiroFAST system, compression property tests include fabric thickness, fabric surface thickness and released surface thickness as shown in Fig. 4.12. The fabric is considered to consist of an incompressible core and a compressible surface. The fabric thickness is measured on a 10 cm^2 area at two different pressures, firstly at 2 gf/cm^2 (equivalent to 0.195 kPa or 19.6 mN/cm^2) and then at 100 gf/cm^2 (equivalent to 9.807 kPa or 981 mN/cm^2). The difference between these two values gives a measure of the thickness of the surface layer. The fabric thickness measurements are repeated after steaming on an open Hoffman press for 30 s in order to determine the stability of the fabric finish.

From the KES-FB3 tester, the compression energy, compressibility, resilience and thickness of a specimen can be obtained. A circular compressing board of 2 cm^2 attached with a sensor is used to apply the force on the fabric specimen (Fig. 4.13). The applicable compression force is 0.1 gf/cm^2

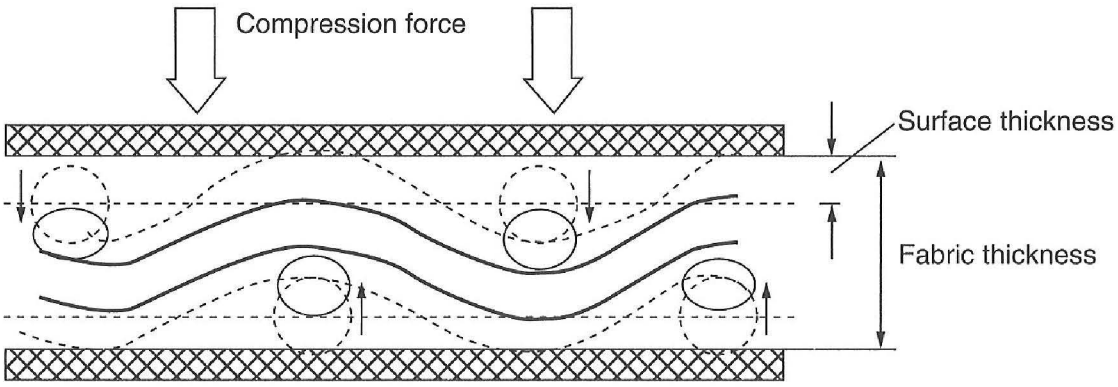

4.12 Compression test principle based on the SiroFAST system.

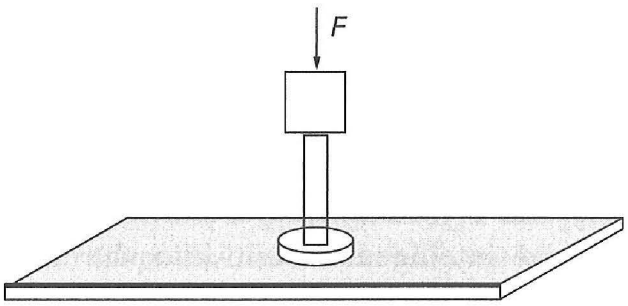

4.13 Compression test on the KES-F system.

(minimum) to 2.5 kgf/cm^2 (maximum) and the machine is running at different compression deformation rates from 0.1 mm/s to 10 mm/s.

4.7 Applications and future trends

Fabric objective measurements provide a scientific means to quantify the quality and performance characteristics of fabrics. This forms the basis for fabric specification, product development, process control, product failure analysis and quality assurance. It also facilitates communication between consumers, manufacturers, designers and researchers in the whole textile chain.

The tests and results can be used to simulate and predict fabric performance in use. For example, fabrics with a low tensile strength and low tear strength may be susceptible to mechanical damage. This can occur when tension is put on the fabric during wear or cleaning. Sharp objects in contact with a fabric may also cause rips, tears or holes. In some cases, mechanical damage may be attributed to the basic construction of the fabric itself. Early identification of the problems in fabrics allows remedial action to be taken before the cost of rejects becomes an issue.

One fabric may have very different performance properties due to the interactions of durability factors. If the fabric durability is affected by environmental influences, such as ultraviolet radiation and atmospheric temperature, not only is the fabric aesthetic property changed, but also the breaking strength may change because of the deterioration of fibres. For example, fibre deterioration in curtain, drapery and sportswear fabrics results from exposure to either direct or indirect rays of the sun. Hence, one test method may or may not predict how a fabric may perform in consumer use. It is often necessary to test a combination of fabric properties.

On the other hand, the interrelationships of all mechanical properties are complex and are affected by many factors such as fabric geometry, setting, finishing, coating, laminating and so on; they can influence performance properties in very different ways. For instance, if other factors such as fibre type and fabric finish are held constant, a tight fabric construction generally contributes to high tensile strength but also lower tear strength and vice versa. A moderate structure, not too tight or too loose, could be expected to yield best abrasion resistance. Thereby, the early tests for the fabric properties enable the best processing route to be selected from the outset, to produce the optimal performance for an intended application.

Developments in modern fabric testing instrumentation have followed two broad routes: simplicity and versatility. This trend will continue, but with increased objectivity and intelligence built into the instruments. Generally, simplicity is preferred in the industry while research organisations prefer versatile test instruments, which are often complex. The chal-

lenge to researchers and instrument developers has been to quantify a complex fabric attribute with a simple parameter. A good example is fabric handle, which is affected by many factors. A simple approach to measuring fabric handle involves extracting a fabric specimen through a fixed diameter nozzle using a CRE machine (Alley, 1978; Alley and McHatton, 1976). A quantity termed 'handle modulus' is calculated from the force–displacement data, the geometric considerations of the nozzle, fabric coefficient of friction and fabric effective thickness. Studies have shown that results from the nozzle measurement are in fairly good agreement with those from other more complicated hand evaluation systems, such as the KES-F system and physical tests related to fabric hand. Other simple techniques include the ring or slot test (Grover *et al.*, 1993) and the pulling force measurement by pulling a fabric through a set of parallel pins (Zhang *et al.*, 2006). These methods consider the combined effect of fabric surface properties and bending stiffness. More developments are likely in this direction, with increased intelligence and sophistication (Pan, 2006).

4.8 Sources of further information and advice

In addition to the references, the following materials and websites provide good sources of further information on fabric testing:

1. *Annual Book of ASTM Standards*.
2. *Fabric Assurance by Simple Testing – Instruction Manual*, 1989, CSIRO Division of Wool Technology, Sydney, Australia.
3. www.iso.org
4. www.astm.org
5. www.sdlatlas.com
6. www.kestato.co.jp
7. www.bodyscan.human.cornell.edu
8. Brown, R., ed. (1999), *Handbook of Polymer Testing, Physical Methods*, Marcel Dekker, New York.
9. Hu, J. L. (2004), *Structure and Mechanics of Woven Fabrics*, Woodhead, Cambridge, UK.
10. Jeong, Y. J. and Phillips, D. G. (1998), 'A study of fabric-drape behaviour with image analysis, Part II: The effects of fabric structure and mechanical properties on fabric drape', *Journal of the Textile Institute*, 89(1): 70–79.
11. Kawabata, S., Postle, R. and Niwa, M., eds (1985), 'Objective measurement: applications to product design and process control', *Proceedings of the Third Japan–Australia Joint Symposium on Objective Measurement: Application to Product Design and Process Control*, Kyoto, Japan, The Textile Machinery Society of Japan.

12. Peirce, F. T. (1930), 'The "handle" of cloth as a measurable quantity', *Journal of the Textile Institute*, 21: T377–416.
13. Saville, B. P. (1999), *Physical Testing of Textiles*, Woodhead, Cambridge, UK.
14. Sen, A. K. (2001), *Coated Textiles*, Technomic Publishing, Lancaster, PA.
15. Tao, X. M., ed. (2002), *Smart Fibres, Fabrics and Clothing*, Woodhead, Cambridge, UK.
16. Warner, S. B. (1995), *Fiber Science*, Prentice-Hall, Englewood Cliffs, NJ.

4.9 References

1. Lyle, D. S. (1977), *Performance of Textiles*, John Wiley & Sons, New York.
2. Kawabata, S. (1980), *The Standardization and Analysis of Hand Evaluation*, 2nd edition, The Textile Machinery Society of Japan, Osaka, Japan.
3. Mizutani, C., Amano, T. and Sakaguchi, Y. (2005), 'A new apparatus for the study of fabric drape', *Textile Research Journal*, 75(1): 81–87.
4. Chen, H., Shen, Y., Liu, X. and Chen, Y. W. (2005), 'Linear regression of fabric's thickness versus drape behaviour', *Journal of Zhejiang Sci-Tech University*, 22(2): 110–113.
5. Saville, B. P. (1999), *Physical Testing of Textiles*, Woodhead, Cambridge, UK.
6. Alley, V. L. (1978), Nozzle extraction process and handlemeter for measuring handle, US Patent 4,103,550, 1 August.
7. Alley, V. L. and McHatton, A. D. (1976), A proposed quantitative measure of fabric handle and the relative characterization of some aerospace materials by handle moduli, *Ninth Air Force Geophysics Laboratory Scientific Balloon Symposium*, Portsmouth, NH.
8. Grover, G., Sultan, M. A. and Spivak, S. M. (1993), 'A screen technique for fabric handle', *Journal of the Textile Institute*, 84: 1–9.
9. Zhang, P., Liu, X., Wang, L. and Wang, X. (2006), 'An experimental study on fabric softness evaluation', *International Journal of Clothing Science and Technology*, 18(2): 83–95.
10. Pan, N. (2006), 'Quantification and evaluation of human tactile sense towards fabrics', *International Journal of Design and Nature*, 1(1): 1–13.