Multi Purpose Storage Shelf

Assembly Instructions

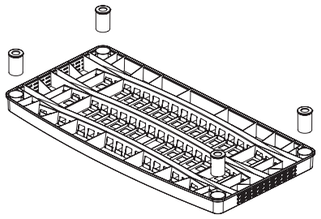

1

Turn any one shelf over and insert 4 feet. Press firmly to ensure each foot is secure.

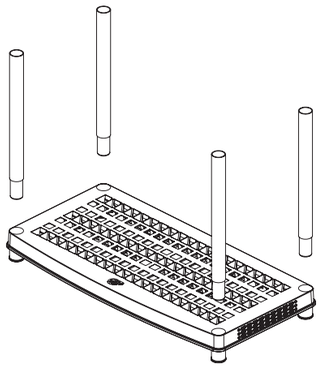

2

Turn over selected shelf and insert 4 pillars. Press firmly to ensure each pillar is secure.

Please Note:
Whilst assembling, please ensure each shelf is facing the same direction.

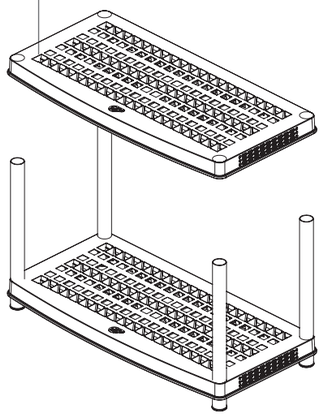

3

Place another shelf onto the pillars, and ensure the shelf is fully engaged by pressing firmly.

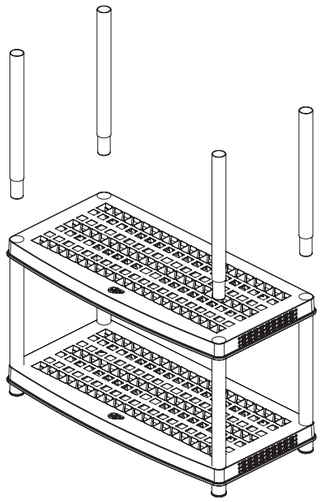

4

Insert the next set of 4 pillars into shelf and repeat step 3 for remaining shelves and pillars.

Use shelf connectors included in the pack to join 2 shelves together.

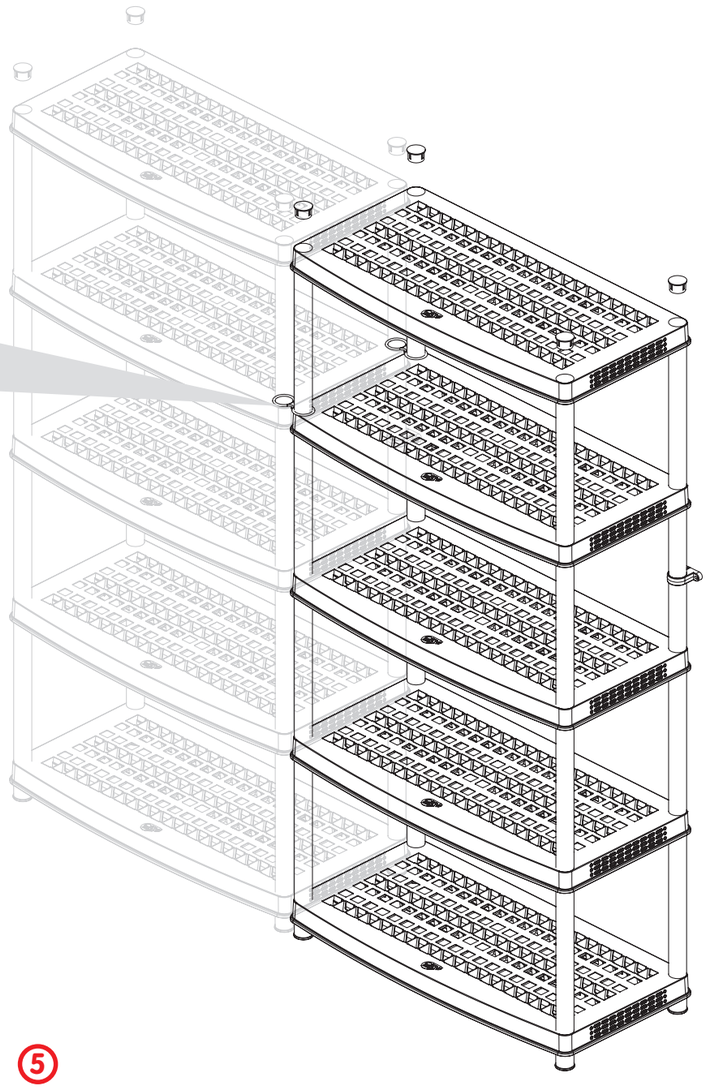

5

Insert 4 top caps into the top shelf to complete assembly. Shelf is now complete and ready to use.

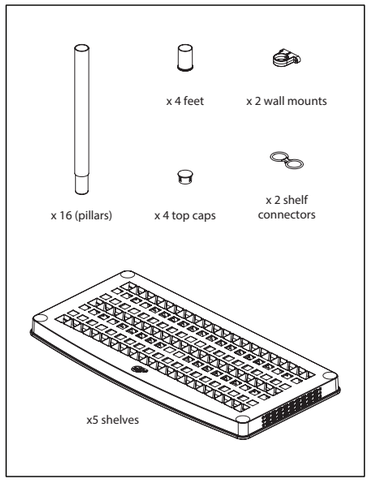

(Pack contains the above components)

IMPORTANT:

- Please read assembly instructions carefully.
- Each shelf is certified to carry a maximum weight of 60kg. Please do not exceed this weight.
- It is recommended that weight is distributed evenly per shelf.
- No standing on, or hanging off shelves.
- Do not drag the Multi Purpose Storage Shelf, always lift it. Please ensure shelves are free of all items before doing so.